PROJECT REFERENCE NO.	SHEET NO.
W-5601C	2
R/W SHEET NO.	

DocuSigned by: Greg S. Davis 33D47B5FD78F4A8... 10/29/2015

DIVISION DESIGN / CONSTRUCT ENGINEER

DOCUMENT NOT CONSIDERED FINAL UNLESS ALL SIGNATURES COMPLETED

TYPICAL SECTION NO. 1

-L MED- STA. 22+72.03 TO 24+89.90

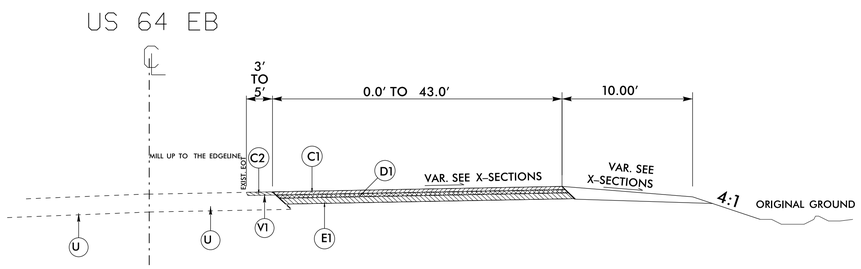

TYPICAL SECTION NO. 2

-L MED- STA. 52+61.01 TO 58+36.01

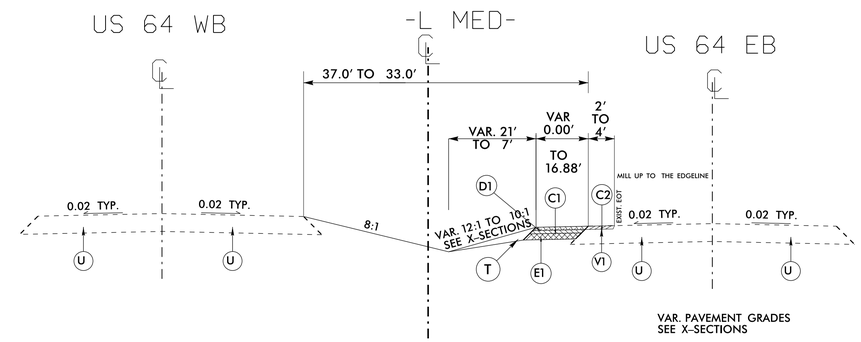

TYPICAL SECTION NO. 3

-L MED- STA. 58+36.01 TO 59+05.12

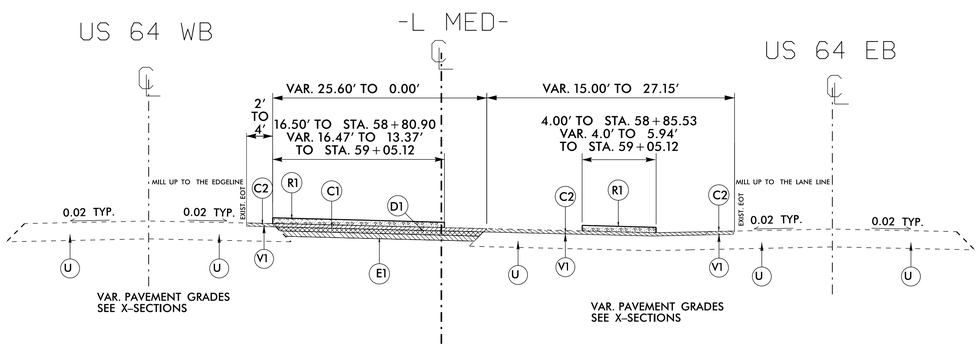

TYPICAL SECTION NO. 4

-L MED- STA. 59+05.12 TO 59+26.01

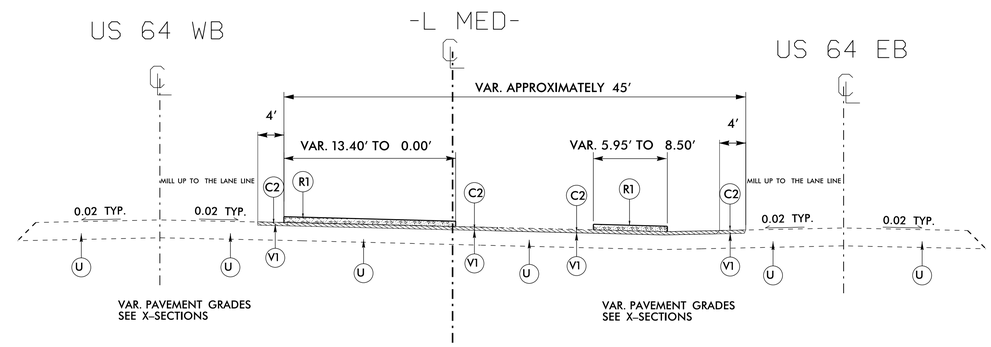

TYPICAL SECTION NO. 5

-L MED- STA. 59+26.01 TO 59+56.01

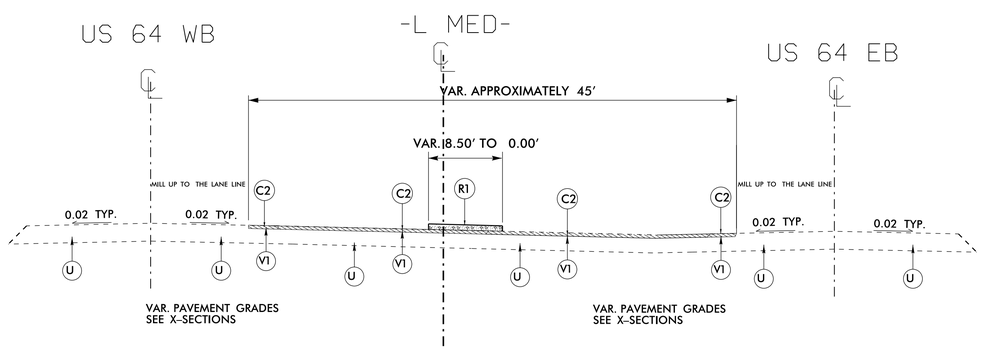

PAVEMENT SCHEDULE

C1	PROP. APPROX. 3" ASPHALT CONCRETE SURFACE COURSE, TYPE S9.5B, AT AN AVERAGE RATE OF 168 LBS. PER SQ. YD. PER 1½" DEPTH. TO BE PLACED IN TWO LAYERS.
C2	PROP. APPROX. 1.5" ASPHALT CONCRETE SURFACE COURSE, TYPE S9.5B, AT AN AVERAGE RATE OF 168 LBS. PER SQ. YD.
D1	PROP. APPROX. 4" ASPHALT CONCRETE INTERMEDIATE COURSE, TYPE I19.B, AT AN AVERAGE RATE OF 456 LBS. PER SQ. YD.
E1	PROP. APPROX. 5.5" ASPHALT CONCRETE BASE COURSE, TYPE B25.B, AT AN AVERAGE RATE OF 627 LBS. PER SQ. YD.
R1	5" MONOLITHIC CONCRETE ISLAND. (KEYED IN)
T	EARTH MATERIAL.
U	EXISTING PAVEMENT.
V1	1.5" MILLING

NOTE: PAVEMENT EDGE SLOPES ARE 1:1 UNLESS SHOWN OTHERWISE.

28-OCT-2015 14:23
r:\proj\wrd\psh\typ\W-5601C_typ.dgn
rdwy:\wrd\US64_sr2469browns_crossroads_rdl\psh\typ\W-5601C_typ.dgn
ORIGIN: AT R8GAD-270410